ekey cable transfer -6-core 101910

MONTAGEANLEITUNG
MOUNTING INSTRUCTIONS
MONTÁŽNÍ NÁVOD
NOTICE DE MONTAGE
ISTRUZIONI DI MONTAGGIO
MONTAGEAANWIJZING
MONTÁŽNY NÁVOD
NAVODILA ZA MONTAŽO

850009

ID284/601: Version 1, 19.05.2017
http://www.ekey.net/downloads

Technical data:
Electrical parameters: 2,5 A; 48 V DC
Cable: Li9Y11Y, 6 x 0,34 mm², RoHS compliant
IP Rating: IP40 / connector IP67
Tempature: from -20°C to +75°C

Dimensions

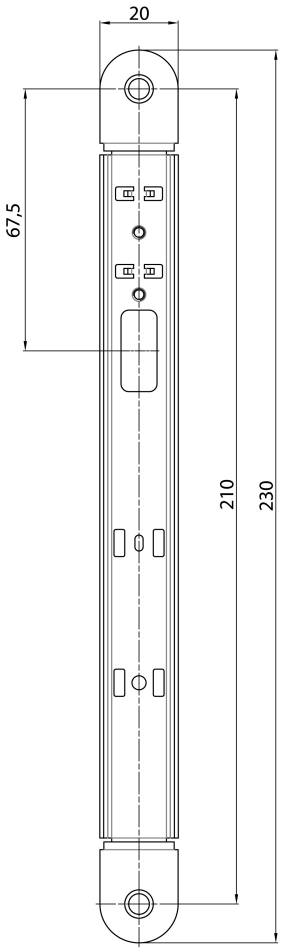

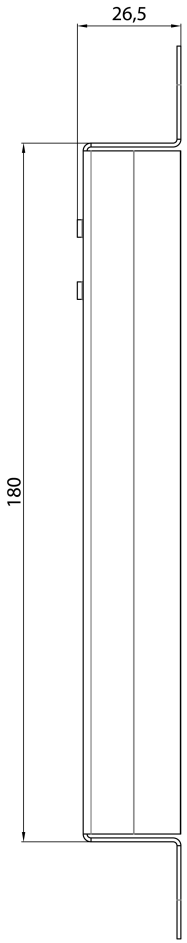

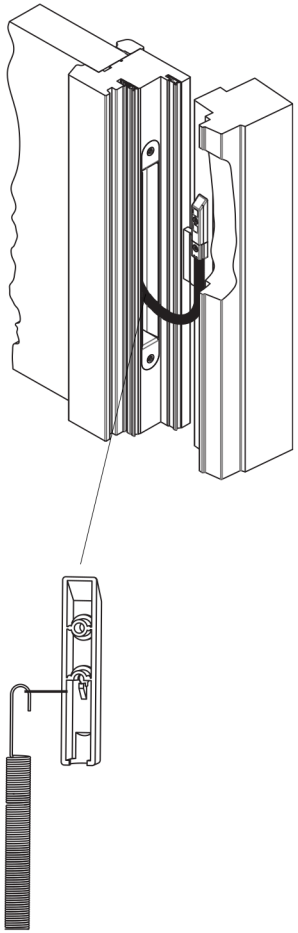

Milling dimensions for mounting into hollow profiles

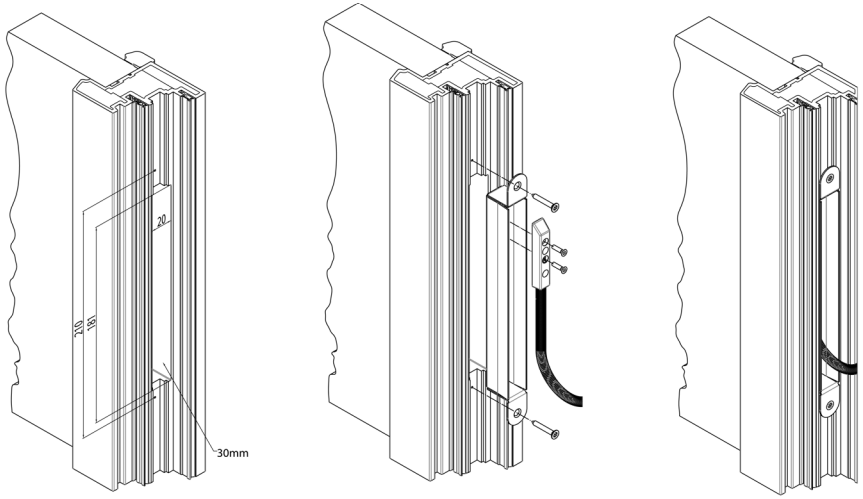
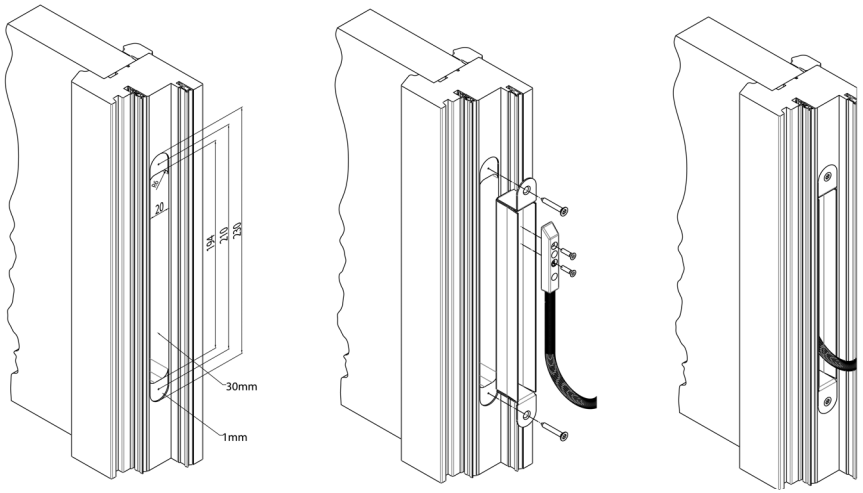
Milling dimensions for mounting into solid profiles